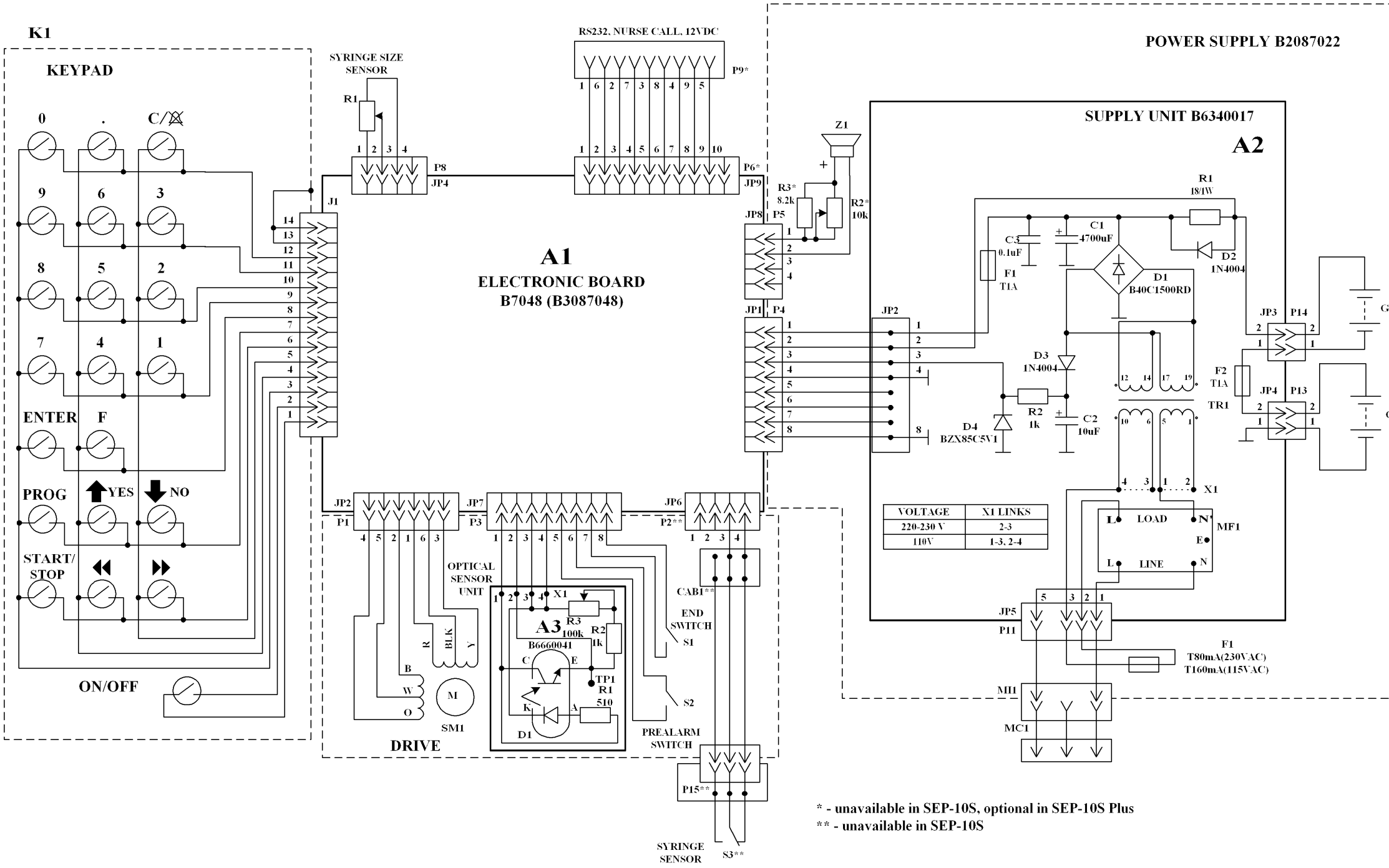

VOLTAGE	X1 LINKS
220-230 V	2-3
110V	1-3, 2-4

* - unavailable in SEP-10S, optional in SEP-10S Plus

** - unavailable in SEP-10S