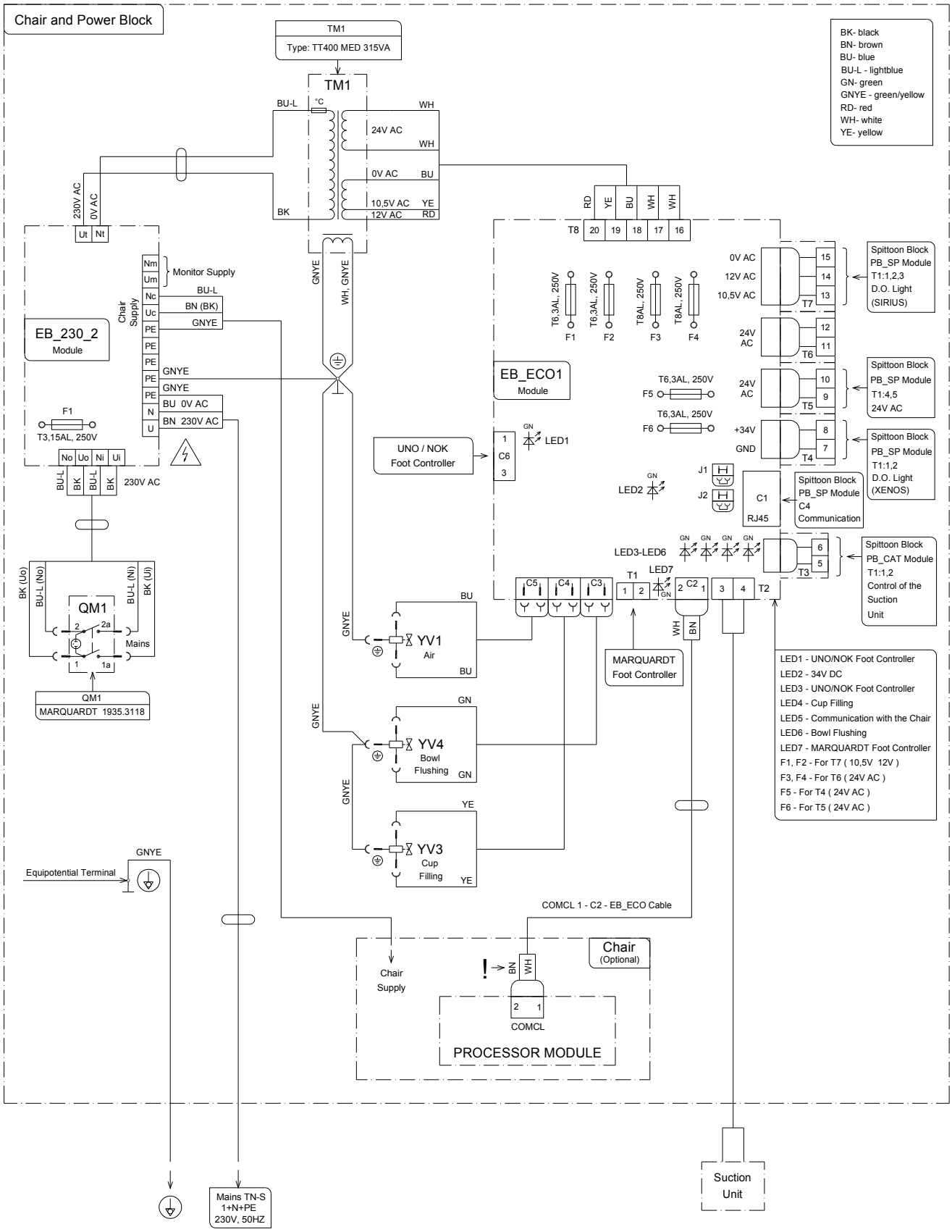Wiring diagram of the Power Block - base, for DC170, DC180, DC170 Orthodontics