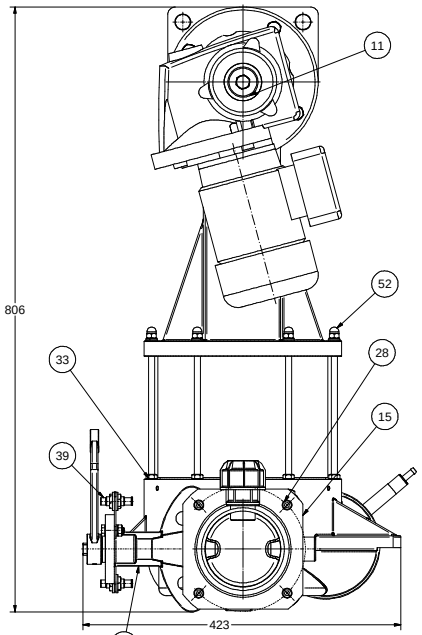

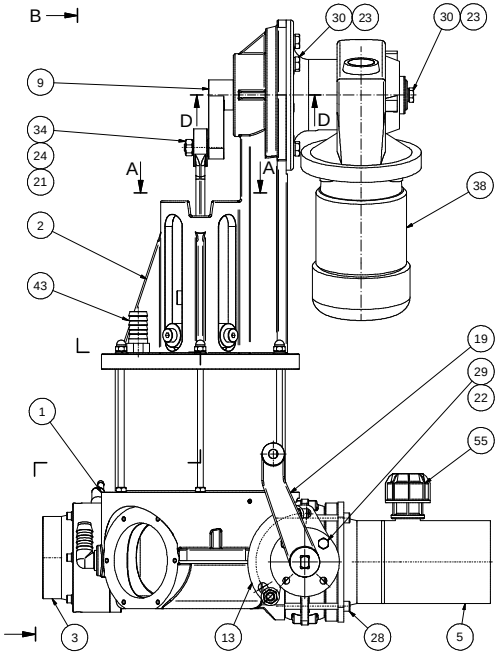

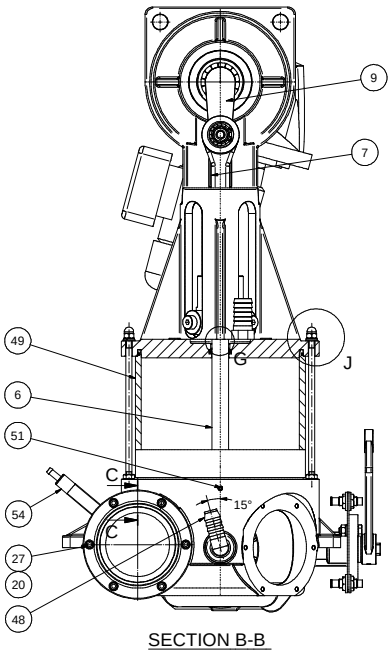

SECTION B-B

* O-RING n113.9xn3.53 B.S.REF246(ALMOG) OR ACCORDING TO DRAWING No. 4-MCM2-34.

Parts List						
ITEM	TITLE	QT	STANDARD	DIMENSION	PART NUM	CAT No
1	PUMP BODY(MACH)	1			3-MCM2-18	01020061
2	TOWER ASS.	1			3-MCM2-20	01020065
3	VALVE HOUSING	1			3-MCM2-15	01020072
4	FORK	1			3-MCM2-3	01020004
5	TUBE ASS.	1			3-MCM2-4	01020005
6	PISTON ASS.	1			3-MCM2-5	01020006
7	CONNECTING ROD ASS.	1			3-MCM2-6	01020007
8	VALVE RING ASS.	1			3-MCM2-8	01020008
9	CRANK (Machining)	1			3-MCM2-11	01020009
10	BUTTERFLAY VALVE	1			4-MCM2-7	01020010
11	WASHER	1			4-MCM2-12	01020011
12		1				
13	PLATE FOR SENSORS	1			4-MCM2-19	01020013
14	SLEEVE	1			4-MCM2-23	01020014
15	LOCKING PLATE	1			4-MCM2-24	01020015
16	WHEEL	4			4-MCM2-39	01020083
17	SLEEVE	4			4-MCM2-26	01020017
18	SLEEVE	1			4-MCM2-27	01020018
19	LEVER ASS.	1			4-MCM2-32	01020019
20	WASHER	6	DIN125A A 2	¢6		04000020
21	WASHER	1	DIN125A A	¢12		04000053
22	SPRING WASHER	8	DIN127A A 2	¢8		04000184
23	SPRING WASHER	5	DIN127A A 2	¢10		04000033
24	SPRING WASHER	1	DIN127A A	¢12		04000016
25	SCREW	2	DIN7982 A2	ST3.9x19		04000420
26	SCREW	1	DIN916 A2	M5x6		04000305
27	SCREW	6	DIN912 A2	M6x60		04000369
28	SCREW	4	DIN912 A4	M8x90		04000396
29	BOLT	2	DIN933 A2	M8x25		04000380
30	BOLT	5	DIN933	M10x25		04000232
31	SHOULDER SCREW	4	ISO7379 12.9	¢12/M10x25		04000056
32	SHOULDER SCREW	1	ISO7379 12.9	¢12/M10x30		04000057
33	NUT	8	DIN934 A2	M8		04000303
34	NUT	1	DIN934	M12x1.5		04000248
35		1				
36		1				
37	KEY	1	DIN6885 A	8x7x50		04000215
38	GEAR MOTOR	1	NORD		SK2SM63A F-80L4CUS	05000124
39	PROXIMITY SWITCH INDUCTIVE	2	AUTONICS		PR12-4-DP	05000018
40	O-RING	2	ALMOG	¢215.58x ¢2.62	B.S.REF 173	04000470
41	SEAL	1			*	04000040
42	SEAL	1	SEAL JET	¢30x¢22x5	PU A11	01020021
43	PIPE CONNECTOR	1	SPEARS	3/4"x¢25	1436-102	06000051
44		1				
45						
46		1				
47	BEARING	2	SKF		6206-ZZ	01020023
48	ELBOW CON.	1	SPEARS	3/4"		06000112
49	CYLINDER	1			4-MCM2-35	01020070
50	STUD BOLT	6			4-MCM2-38	01020071
51	SCREW	3	DIN914 A2	M6x20		04000471
52	DOMED CAP NUT	6	DIN1587 A2	M8		04000469
53	WASHER	6	DIN125 A2	¢8		04000192
54	PROXIMITY SWITCH	1	SIEMENS	M18 SN=12 PNP NO	3RG4613-1 AB01	05000191
55	COUPLING	1	PLASSON	¢32x1"	140200032 010	06000136

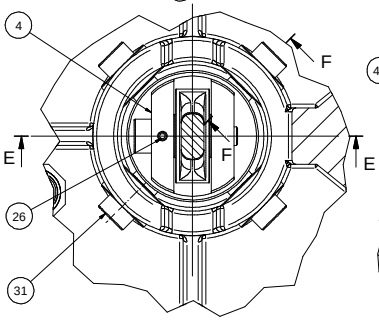

SECTION A-A

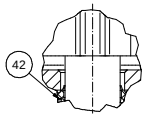

DETAIL G

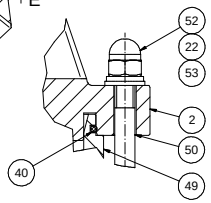

DETAIL J

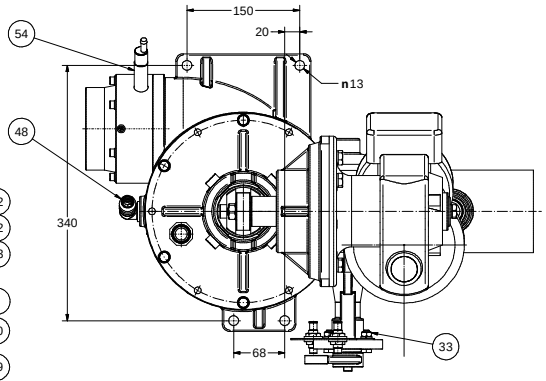

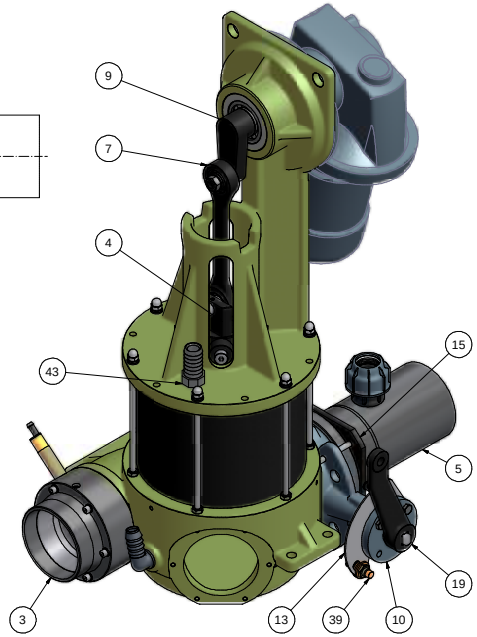

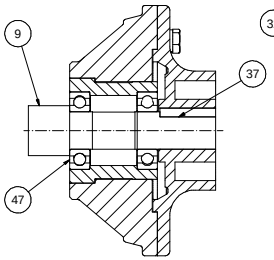

SECTION D-D

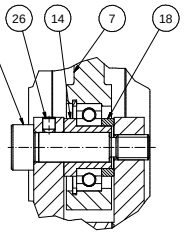

SECTION E-E

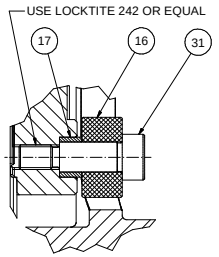

SECTION F-F

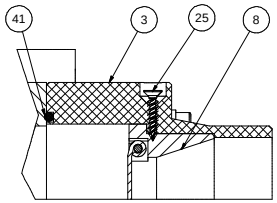

SECTION C-C

Description	PUMP ASS.	Material	
		Weight	82.5Kg
		Dimensions	721x586x423
			Date / Name
		Drawn	1/4/2004 ELENA
		Checked	7/8/2008 YURI
		Standard	
		General Tolerance	IT 14/2
Drawing No.	1-MCM2-2	Catalog No.	01020080
Batch No.	003	Edition	2
			1 / A1

MCM ENVIRONMENTAL TECHNOLOGIES
Moledet ,M.P.Gilboa 19130, Israel
Tel 972-4-6531104, Fax.972-4-6532505

PDF created with pdfFactory Pro trial version www.pdffactory.com